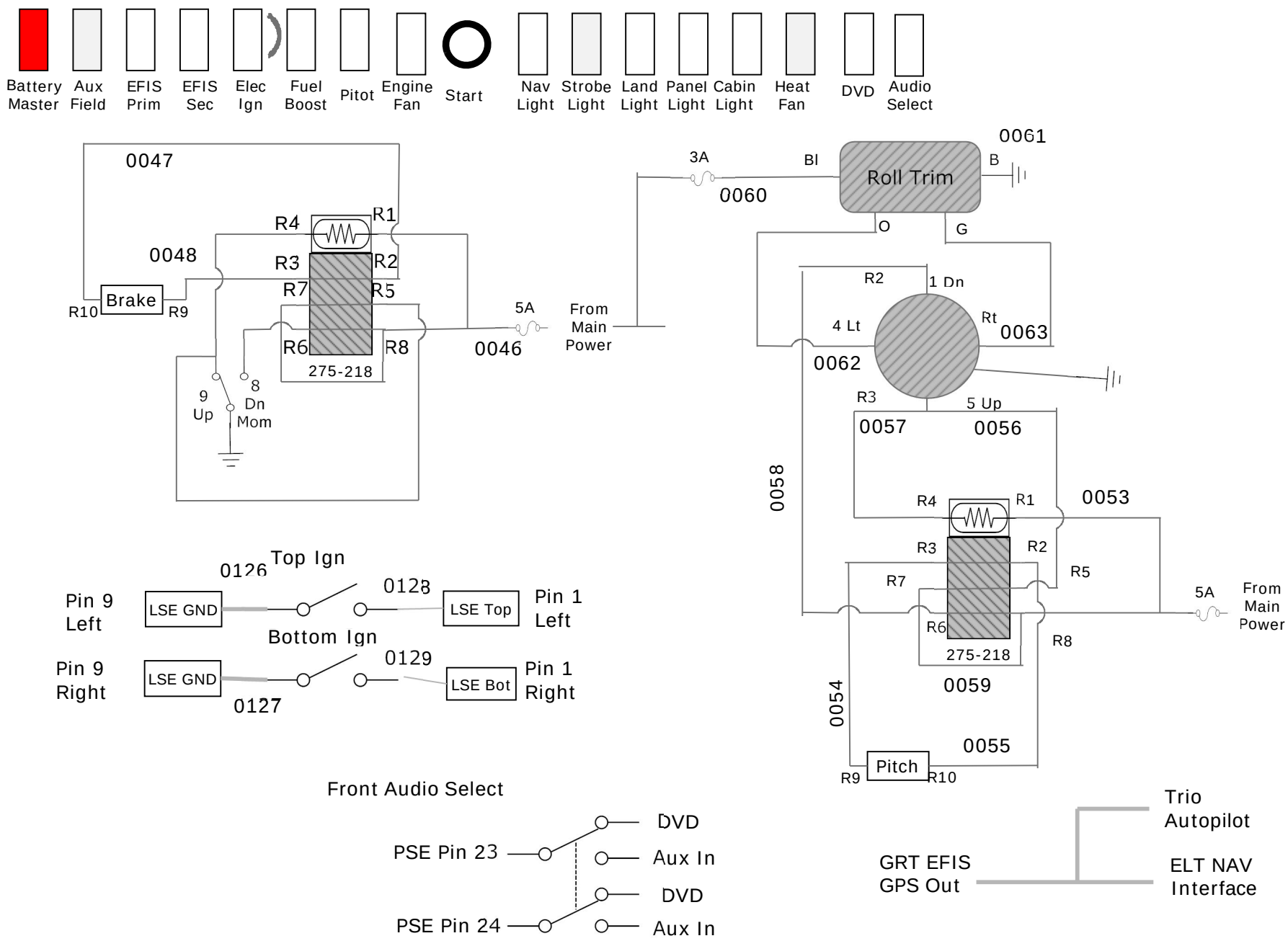
Battery Master
Aux Field
EFIS Prim
EFIS Sec
Elec Ign
Fuel Boost
Pitot
Engine Fan
Start
Nav Light
Strobe Light
Land Light
Panel Light
Cabin Light
Heat Fan
DVD
Audio Select
0047
0048
R4
R1
R3
R2
R7
R5
R6
R8
275-218
Brake
R10
R9
9 Up
8 Dn Mom
5A
0046
From Main Power
3A
0060
Bl
Roll Trim
0061
B
O
G
R2
1 Dn
4 Lt
Rt
0063
0062
R3
5 Up
0057
0056
0058
R4
R1
0053
R3
R2
R7
R5
R6
R8
275-218
5A
From Main Power
0059
0054
0055
Pitch
R9
R10
Top Ign
0126
0128
Pin 9 Left
LSE GND
LSE Top
Pin 1 Left
Bottom Ign
0129
Pin 9 Right
LSE GND
LSE Bot
Pin 1 Right
0127
Front Audio Select
PSE Pin 23
DVD
Aux In
PSE Pin 24
DVD
Aux In
GRT EFIS GPS Out
Trio Autopilot
ELT NAV Interface